DIMENSIONS (CU-UHD4000)

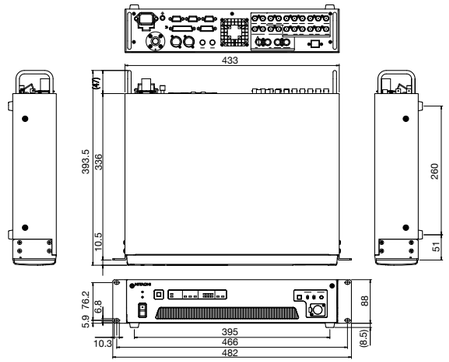

DIMENSIONS (SU-1000)

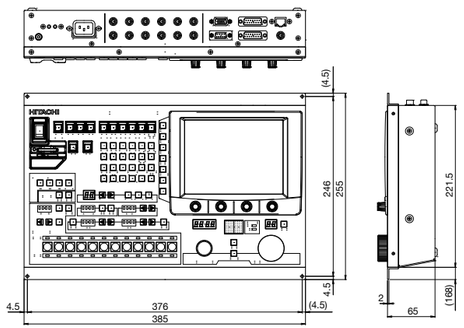

DIMENSIONS (RU-1500JY)

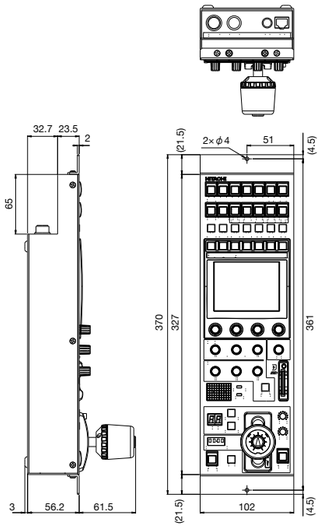

DIMENSIONS (VF-L90HD)

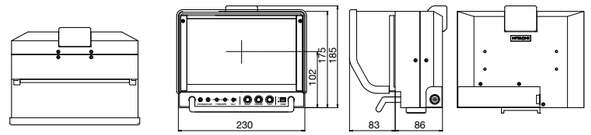

DIMENSIONS (HDF-EL800H)

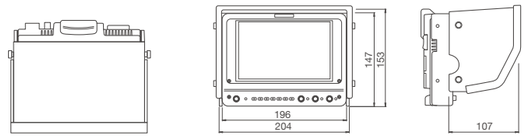

⚠ CAUTION : To ensure safe operation, please read the instruction manual before using this product.

These Specifications are subject to change without notice.

Hitachi Kokusai Electric Inc.

Head Office : 4-14-1, Sotokanda, Chiyoda-ku, Tokyo 101-8980, Japan
Phone : +81(0)3-6734-9432, Fax : +81(0)3-5209-5942
URL : http://www.hitachi-kokusai.co.jp/

Hitachi Kokusai Electric (Shanghai) Co., Ltd.
Beijing Branch : Room 1415, Beijing Fortune Building, 5 Dong San Huan Bei-Lu, Chao Yang District, Beijing 100004, China
Phone : +86(0) 10-6590-8755/8756, Fax : +86(0) 10-6590-8757

Hitachi Kokusai Electric America, Ltd. **URL : http://hitachikokusai.us**
Headquarters and Northeast Office : 150 Crossways Park Drive, Woodbury, New York 11797, U.S.A.
Phone : (+1)516-921-7200, Fax : (+1)516-496-3718
West Office : 11258 Monarch Street Suite H Garden Grove, CA 92841, U.S.A.
Phone : (+1)714-895-6116, Fax : (+1)714-895-6252
Midwest Sales : Phone : (+1)330-334-4115, Fax : (+1)516-496-3718
Service : (+1)989-345-5379
South Sales : Phone : (+1)850-934-1234
Service : (+1)256-774-3777
Parts Center : Phone : (+1)516-682-4435, Fax : (+1)516-921-0993
Latin Sales : Phone : (+1)516-682-4408, Fax : (+1)516-496-3718

Hitachi Kokusai Electric Canada, Ltd.
Head Office : 1 Select Avenue Unit#12 Scarborough, Ontario M1V5J3, Canada
Phone : (+1)416-299-5900, Fax : (+1)416-299-0450
Eastern Office : 5795 Chemin St. Francois St. Laurent, Quebec H4S 1B6, Canada
Phone : (+1)514-332-6687, Fax : (+1)514-335-1664

Hitachi Kokusai Electric Europe GmbH **URL : http://www.hitachi-keu.com**
Sales and Engineering Frankfurt office : Siemensstr. 9, D-63263 Neu-Isenburg, Germany
+49(0) 6102-8332-0, Fax : +49(0) 6102-202616
London office : Windsor House, Queensgate, Britannia Road, Waltham Cross, Hertfordshire EN8 7NX,United Kingdom
Phone : +44(0) 845-121-2177, Fax : +44(0) 845-121-2180

General email address : webmaster@hitachi-keu.com

Hitachi Kokusai Linear Equipamentos Eletrônicos S/A **URL : http://www.linear.com.br**
Head Office : Praca Linear, 100, Centro - 37540-000, Santa Rita do Sapucai, MG - Brazil
Phone : (+55 35) 3473-3473, Fax : (+55 35) 3473-3474
Sales office : Av Paulista, 1159 – 3° andar - Ed Barão do Serro Azul
Jardim Paulista -01311-200, São Paulo, SP - Brazil
Phone : (+55 11) 3541-3244, Fax : (+55 11) 3541-2425

Hitachi Kokusai Electric Turkey Elektronik Ürünleri Sanayi ve Ticaret A.Ş.
213 Palladium Ofis ve Residence Binasi Barbaros Mahallesi Halk Caddesi No:8/A Kat:2-3 Atasehir 34746 Istanbul, Turkey
Phone : 90-216-663-6045

DB-E236.R1 Printed in Japan (D)' 18-11

Hitachi Kokusai Electric

HITACHI
Inspire the Next

4K Ultra HD Television Production Camera

SK-UHD4000

4K ULTRA HD

BEST of SHOW TVBEurope 2014

The world's first[1] 4-sensor 4K camera directly employing 2/3-inch optics to achieve high-resolution, faithful images for television production applications.

Note-1 : As of August 2014.

Easy transition to 4K with minimal cost

Hitachi's SK-UHD4000 system 4K color camera can be used with existing 2/3-inch format ENG and Studio/Field lenses without the use of an optical-mechanical adaptor between camera and lens.

2/3-inch lenses are the industry standard for studio and outside broadcast (OB) live event production applications. The extended depth of field required in sports television production is therefore preserved.

A unique, high-precision 4-sensor optical system and latest MOS sensor technology, provide 4K (3840 X 2160) and 2K (1920 x 1080) video simultaneously.

Camera controls and footprint are the same as current broadcast HDTV cameras making it simple to replace existing 2K infrastructure with minimal difficulty.

Advanced Optical and Digital Processing Technologies

B4 2/3-inch Lens Mount

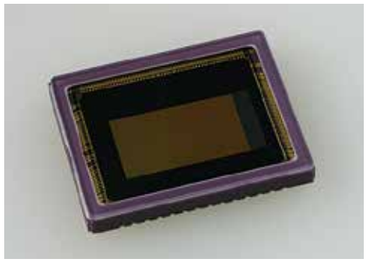

2/3-inch MOS Sensor

2/3-inch Lens Mount

The use of a B4 (BTA S1005A) 2/3-inch lens format overcomes many objections to the wide adoption of 4K for TV program production including the use of Cine-style lenses, shallow depth of field and the limited ergonomics of Cine-lens operation.

Advanced Color Separation & Sharpness

The use of a 4-port RGB color separating prism is instrumental in achieving the performance of a 4K 35mm single CFA sensor in a standard portable camera chassis. It is also the best method for preserving lens MTF (Modulation Transfer Function) to provide the utmost contrast in 4K images produced by the Hitachi's SK-UHD4000 camera. The camera's optical block employs 'dual-green' and 'pixel offset' technologies to dramatically increase resolution in the Y (luminance) channel. Using highly accurate sensor placement and Hitachi's advanced digital signal processing (DSP), the SK-UHD4000 creates high resolution images from a total 8.8 million effective pixels.

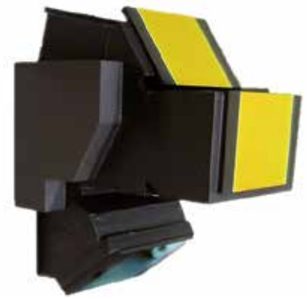

4-port Prism

Unique Digital Signal Processing

Each essential part of the Hitachi's SK-UHD4000 camera system has its own DSP processor. Different DSP ICs are used independently for 4K camera head processing, the transmission system and Camera Control Unit (CCU) processing. New, power efficient Hitachi Digital Signal Processors are designed to work with any 4K imaging technology now or in the future, offering a high ROI (return on investment).

Digital Signal Transmission Via Hybrid Fiber

The SK-UHD4000 camera system utilizes industry standard Hybrid Fiber-Optic Cable (HFOC) connectors made of high-strength materials to ensure durability and reliable performance under the most demanding TV production conditions.

Maximum HFOC length with applied camera power and fully operational facilities is 4,000m (13,200 feet) with no utility power*. The Optical power meters on the CCU front panel indicate the optical condition of both transmitting and receiving signals independently to accurately depict proximity to the “digital cliff” (maximum cable distance) .

*HFOC distance with applied CCU power differs depending on system configuration and HFOC and connectors.
It is dependent on type of lens used, viewfinder, studio adaptor, teleprompter, HFOC, connectors and other accessories that may be connected thereby consuming power otherwise available for the camera head.

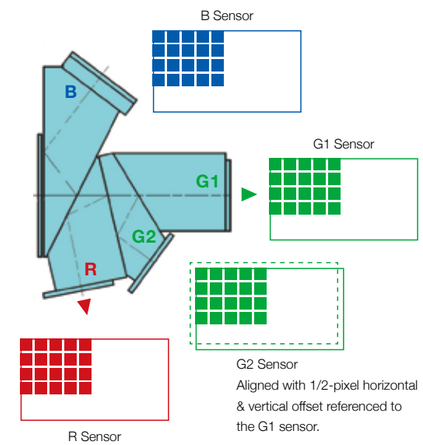

Superb 4K Picture Reproduction & Enhancement Tools

Real-time Lens Aberration Correction (RLAC)

Modern HDTV lenses can still produce optical distortions. One of these called “lateral chromatic aberration” can be reduced in certain lens models when used with the SK-UHD4000 camera system. The SK-UHD4000 camera's function is called RLAC (Real-time Lens Aberration Correction) and it dynamically corrects images using correction data provided by the lens, through a digital interface with the camera.

Full Frame

RLAC OFF

RLAC ON

Luminance Response Tools

Black Gamma

The SK-UHD4000’s Black Gamma function can control Initial Gamma gain more finely than conventional black stretch.
Independent Initial Gamma controls are provided for the Red, Green and Blue channels providing a fine granularity control over dark colors.

Black Stretch

The SK-UHD4000’s Black Stretch function allows for better reproduction of dark or underexposed areas by evenly raising the luminance response without changing the pedestal or white clip/ knee settings. It is especially useful in high contrast shooting conditions.

Black Stretch OFF

Black Stretch ON (Simulated image)

Ultra Gamma

A useful function implemented in the SK-UHD4000 is Ultra Gamma, which provides seven different responses to dramatically increase exposure latitude of the camera in shooting conditions where lighting and scenery vary widely in intensity.

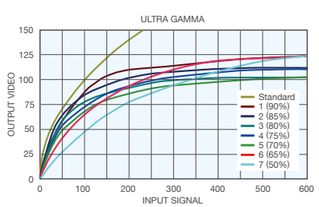

Color Reproduction Excellence

Triple-Masking

The Triple-Masking function includes 12-vector, linear matrix and skin tone masking providing users wide latitude in subject image color control. The 12-vector color corrector provides independent control of hue and saturation for six primary and six secondary combinations of colors. A 6-axis linear matrix provides overall color control for excellent, precise color rendition control. The skin tone masking function provides “fine painting” (hue and saturation) of skin tones without affecting other colors in the scene.

Skin tone Masking OFF

Skin tone Masking ON(Simulated image)

High Dynamic Range

Selectable HLG and PQ HDR profiles provide deeper blacks, increased detail in mid-tones, brighter highlights and vivid colors. This dramatic improvement in picture quality is easily visible at all viewing distances. HDR is available on the 4K and 2K CCU SDI outputs.

An optional simultaneous HDR and SDR output capability has separate and independent adjustments for each output.

Preset Masking

The Preset Masking function recalls known industry standard colorimetry values that are precisely calibrated at the factory.
These color standards are: STANDARD (Hitachi standard) / ITU-709 / SMPTE240M /SMPTE-WIDE / NTSC / EBU.

Knee Saturation

Washed out colors are faithfully reproduced in bright areas of the image with the Knee Saturation control.

Chroma Saturation

Total Chroma Saturation allows control over the amount of color in the image. A purely black & white image can be also be achieved.

Auto Chroma

Auto Chroma automatically reduces over-saturated colors in the image caused by extremely bright and colorful objects such as emergency vehicle lights or stage lighting LEDs.
Provides ‘legalizing’ the color gamut of preset masking settings.

Picture Sharpness Enhancement

High Chroma Detail

The High Chroma Detail adjustments allow precise control of the detail level in highly color-saturated portions of the picture such as the petals of a rose or a colorful fabric.

High Chroma Detail OFF

High Chroma Detail ON(Simulated image)

Skin Tone Detail

The Skin Tone Detail functions allow a flesh-color based softening of the image to achieve a more youthful look for on camera personalities.

Two individual memories exist as well as a function to automatically detect the hue, saturation and luminance of the skin tone to be affected. Furthermore, the Skin Tone Detail level can be adjusted to follow the lens' zoom to avoid 'rubber faces' in wide angle shots while using the function.

Skin Tone Detail OFF

Skin Tone Detail ON(Simulated image)

Focus Assist

Precise focus can be easily achieved with the aid of Hitachi's viewfinder Focus Assist functions. There is a Linear Focus indicator at the bottom of the viewfinder display, a Pixel-to-Pixel function that displays an enlarged image without re-sizing and Edge color peaking which emphasizes the in-focus area in an easily visible color[2] . Each focus assist function can be selected in the VF menu according shooting conditions and can be activated when the camera operator begins to focus.

Pixel-to-Pixel display on the VF screen.
The display position is selected from the center area and four quadrant area.

Note-2: Available after March 2015.

Other Useful Production Camera Features

Prompter and Floor Monitor Power

The SK-UHD4000 camera system provides plenty of power to drive two 24-inch LCD monitors. This makes for a cleaner, more reliable install and avoids safety issues with multiple cables on your studio floor.

Floor Monitor Digital Video

The studio floor or talent monitor can be driven with SDI (digital) video for critical viewing by the talent.

Gray-Scale Automatic Setup

Hitachi’s Gray-scale auto-setup accurately adjusts the video parameters of the camera by using an external known reference, under actual lighting conditions, compensating for the lens in use. Color matching can easily be accomplished by employing this unique function.

RET/INCOM Handle Switches

RET and INCOM talk switches are located on the handle for easy operation in hand held and low angle shooting.

Dual Filter Wheel with 10 Optical Filters

SK-UHD4000 offers two remotely controlled filter wheels as a standard feature. A total of 10 optical filters are available: 4 ND filters and a cap on one wheel and 4 color correction filters and an effect on another wheel. Optical filters are the preferred method of color correction or attenuation to preserve the camera's signal to noise ratio and color reproduction fidelity.

High-speed, Progressive, Optical Digital Transmission and Camera Control System

The CU-UHD4000 Camera Control Unit and CA-UHF4000 Fiber Camera Adaptor constitute the control and transmission system for the new SK-UHD4000 portable 4K color camera. The Camera Control Unit (CU-UHD4000) provides significantly reduced power consumption and improved functionality. SDI outputs (1080p/1080i/720p/480i/576i) and SDI inputs (1080p/1080i/720p) are offered as standard. Down-converted 2K images are very high quality and completely compatible with standard HD cameras. This flexible system is capable of providing most modern HD/SD-SDI video signals required by today's HDTV program production demands.

A full complement of Serial Digital Interfaces are provided as standard equipment:

Digital Inputs/Outputs:

- 4K Digital OUT [4x 3G-SDI OUT /1 set]
- 4K 12G SDI OUT x 2 sets (Option board)
  Support SQUARE DIVISION and 2 Sample Interleave Division with 3G-SDI Level A and Level B.
- 3G-SDI, HD-SDI or SD-SDI OUT x4 [x2/x2 Embedded Audio available] (SD-SDI 16:9/4:3 switchable.
- HD-SDI or SD-SDI PIX OUT x1 [Embedded Audio available]
- 3G-SDI or HD-SDI RET In x4 [for Viewfinder]
- 3G-SDI or HD-SDI RET In x2 [for Floor Monitor] (HD-SDI 3G/1.5G switchable)

Analog Input

- PROMPT IN x1
- GL IN x1

4K Output Format

4K outputs are available via BNC connectors. They can be switched between SQUARE DIVISION and 2 SAMPLE INTERLEAVE DIVISION formats.

12G Output Format

4K outputs are available via a 12G Single Link BNC output option. They can be switched between SQUARE DIVISION and 2 SAMPLE INTERLEAVE DIVISION formats.

4K Digital OUT Format

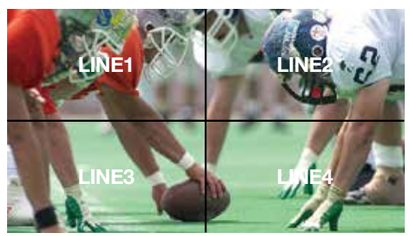

SQUARE DIVISION

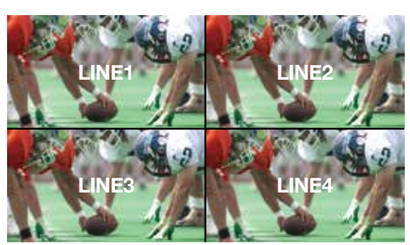

2 SAMPLE INTERLEAVE

2K Cutout Output

A 2K 1080p/1080i image can be cut out of and output from the original 4K image. The 2K raster can be selected via menu anywhere within the 4K image.

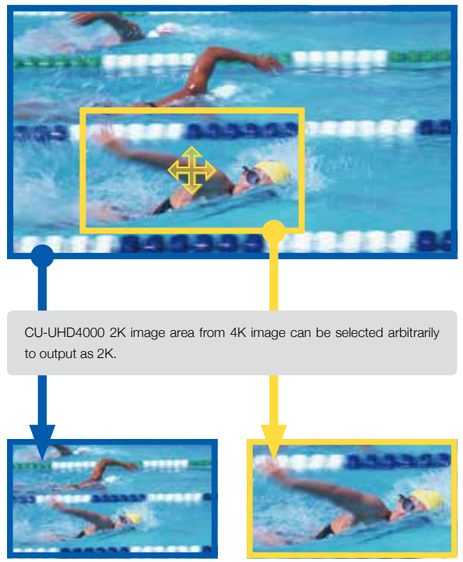

CU-UHD4000 2K image area from 4K image can be selected arbitrarily to output as 2K.

Down-converted from 4K image to high quality 2K image

2K cutout image

Compact CCU:

The CU-UHD4000 Camera Control Unit is a very compact 2U size.

High Quality Down-converted HD:

A high performance down-conversion process is used to change the 4K signal into 2K HD. It maintains a high depth of modulation and outputs superb HD picture quality.

SMPTE 311M Hybrid Fiber Cable:

The effective HFOC length can be up to 4,000m (13,200 feet) with no utility power. HFOC distance with applied CCU power differs depending on system configuration and HFOC and connectors.

SDI Embedded Audio:

Two channels of MIC audio can be embedded in HD-SDI/SD-SDI output (SMPTE 425M/299M/272M).

TRUNK DATA (RS-422 or RS-232C (optional))

CU-UHD4000 Front Panel

CU-UHD4000 Rear Panel

Studio and Field Production Viewfinders

The SK-UHD4000 camera system offers three choices for Studio or Field production viewfinders. VF-L90HD is a color 9- inch TFT-LCD screen designed for critical color image viewing.
TFT-LCD screens are most suitable where precise composition and color evaluation of the image are required. The HD-EL800H is a color 7.4-inch OLED screen. OLED viewfinders are more suited to Sports and OB applications where quick response and contrast are required. Studio and Field production viewfinders can be outfitted with alternate mounts to decrease overall system cost. The VF-402-S3 is a black & white CRT-type ENG viewfinder with high-brightness and contrast making it ideal for easy visibility in field production.

VF-L90HD Viewfinder/AT-951

HDF-EL800H Viewfinder/AT-S951

VF-402-S3 Viewfinder

ACCESSORIES

Setup Control Unit & Remote Control Unit

The SU-1000 Setup Control Unit is used for the adjustment of camera parameters in a multi-camera production environment. This unit provides full control of SK-UHD4000 camera systems, utilizing a new touch screen LCD panel to expand control functions. It is connected directly to each CCU in parallel via serial data cable with a distance of up to 100 meters. Up to 12 cameras can be directly connected to the SU-1000.
The RU-1500JY Remote Control Unit is a new touchscreen remote operation panel. Painstaking attention has been paid to making the most commonly used controls and functions directly and instantaneously accessible to the video control engineer. A touchscreen display provides access to multi-level menus that are intuitive and easy to read. Data storage and transfer of camera adjustments can easily be performed with the use of the SD card slot provided. It is an ideal production tool that enhances any HD studio or field production.

SU-1000

RU-1500JY

Studio Adaptor

Hitachi offers the SA-1000 Studio Adaptor for maximum lens compatibility. The studio adaptor serves as a mechanical lens supporter with other important features:

Digital Inputs/Outputs:

- The ability to use “Hanger-type” box lenses and "Bayonette-type" hand-held portable lenses without removing the camera from the SA-1000.
- Unlike other lens adaptor systems, the SA-1000 maintains perfect back-focus and optical centering due to Hitachi's Positive Lock camera-to-lens bayonet mount method.
- Functions routinely required by the camera operator in Studio and Field productions are brought out from the camera menu system and grouped on the SA-1000's rear operation panel for easy access.

Hitachi's efforts at providing an advanced level of studio camera features with the Studio Adaptor include a “cable-less” and “toolless” camera connection which increases the systems reliability while retaining the flexibility of 2 viewfinder choices for the SKUHD4000 in this configuration.

LM-B1000/SA-1000
(for Large Box Lens)

LM-B1000/SA-1000/BU-1000
(for Large Box Lens)

Buildup Adaptor
Buildup Adaptor BU-1000 provides putting on and taking off the camera without removing the Viewfinder.

System Configuration Chart

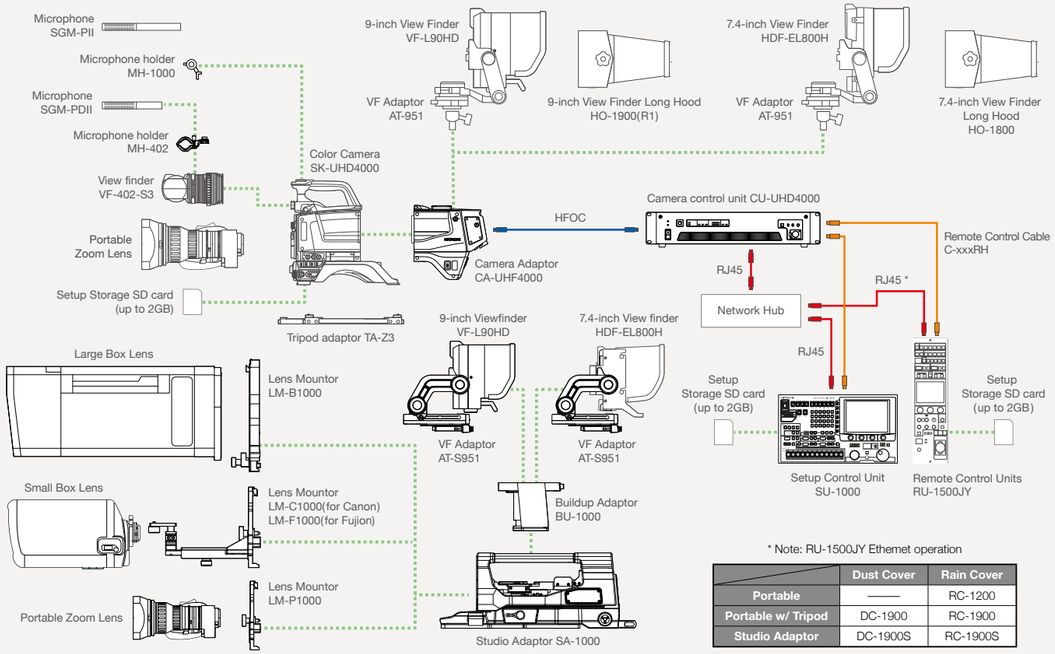

* Note: RU-1500JY Ethemet operation

	Dust Cover	Rain Cover
Portable	———	RC-1200
Portable w/ Tripod	DC-1900	RC-1900
Studio Adaptor	DC-1900S	RC-1900S

Single Mode Fiber System

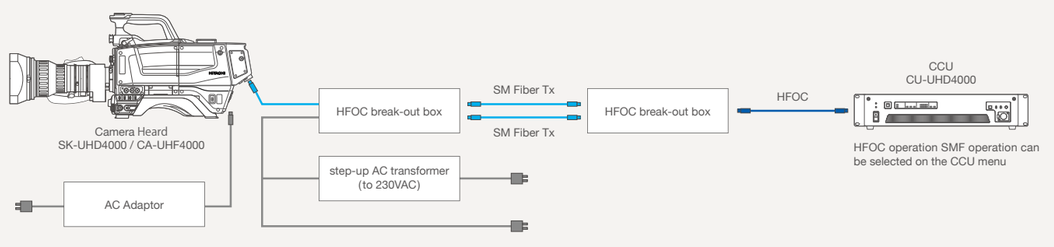

HFOC operation SMF operation can be selected on the CCU menu

SPECIFICATIONS

Camera Head SK-UHD4000 / SK-UHD4000E

Lens mount	B4 Bayonet
Imaging device	4 x 2/3-inch MOS Image sensor Total pixels 2,270 (H) × 1,144(V) 2.6 million pixels
TV system	SK-UHD4000 : 3,840 (H) x 2,160 (V) /59.94Hz SK-UHD4000E: 3,840 (H) x 2,160 (V) /50Hz
Optical system	F1.7 prism
Optical filters	2x motorized filter wheel ND(CAP, CLEAR, 1/4ND, 1/16 ND, 1/64 ND) CC(CROSS, 3200K, 4300K, 6300K, 8000K)
ECC	5600K
Sensitivity	59.94p :F8 @ 2000 lx, 3200 K, 89.9% reflectance 50p :F9 @ 2000 lx, 3200 K, 89.9% reflectance
Signal to Noise ratio	62dB at 1080i
Resolution	Min 1800TVL (4K output from CU-UHD4000) Down-Convert mode Horizontal Min 1100TVL, Vertical Min 1000TVL (At center with lens iris F2.8 to F4, depending on lens)
Vertical smear	No smear
Registration	0.01 % (excluding lens characteristics)
Gain selection	L (low) -3/0dB M (medium) 0/+3/+6/+9/+12/+15/+18/+21 dB H (high) +3/+6/+9/+12/+15/+18/+21/+24 dB
Electric shutter	Preset mode 1/100, 1/125, 1/250, 1/500, 1/1000, 1/2000 second (59.94Hz) 1/60, 1/125, 1/250, 1/500, 1/1000, 1/2000 second (50Hz) Lock scan mode 1/60.15 to 1/2043 second (59.94Hz) 1/50.17 to 1/1939 second (50Hz) AES mode Automatic video level control by shutter speed.
Power consumption	38W Head with Camera Adaptor (without VF)
Dimensions	133(W) x 191(H) x 262(D) mm
Mass	approx. 4.7kg (7.8lbs), with Camera Adaptor (without VF)
Temperature range	Operation -10 °C to +45 °C , 14 °F to +113 °F Storage -20 °C to +60 °C , -4 °F to +140 °F
Input & Output	MON/VF/RET OUT: 1x BNC HD-SDI(1080i) REMOTE:1x 4-pin Multi for remote control panel VF: 1x 20-pin Multi for VF LENS: 1x 12-pin Multi for LENS MIC: 1x 3-pin XLR for MIC-1 SD Memory Card Slot

Remote Control Unit RU-1500JY

Dimensions	102 (W) x 370 (D) x 56.2 (H) mm
Mass	1.3kg
Power input	+12VDC
Operational temperature	0°C to 40°C, 32°F to 104°F
Interface	RJ-45 connector, 4-pin connector

Setup Unit SU-1000

Input signal	VE (Video Engineer) Switch input : Contact closure
Dimensions	385 (W) x 255 (D) x 65 (H) mm
Power input	100/117/220/240VAC, 50/60Hz, auto-sensing
Mass	4.1kg, 9lbs
Operational temperature	0°C to 40°C, 32°F to 104°F
Power consumption	Approx. 33VA
Interface	RJ-45 connector, 4-pin connector

2-inch Viewfinder VF-402-S3

TV system	1080i 59.94/50Hz auto-switching
Construction	2-inch BW 16:9 CRT with removable Diopter (CRT Focus Ring) VF angle rotation X-Y mechanical movement
Resolution	650 TV lines
Functions	BRIGHT, CONTRAST, PEAKING knob VR (front facing)
Internal tally	Red/Green
Front tally controls	Tally OFF, NORMAL, HIGH Front-facing high brightness LEDs
Mass	0.76kg, 1.7lbs

Fiber Camera Adaptor CA-UHF4000

Fiber Connector	SMPTE304M-SMPTE311M-type FOC Cn (LEMO/Tajimi)
Video output	1x BNC HD-SDI1 OUT 3G SDI or HD SDI 3G-SDI: SMPTE 424/ 425 Level A HD-SDI: SMPTE 292M
Return output	1x BNC HD-SDI2 OUT HD-SDI (SMPTE292M) (*1) HD Down-converter Output in standalone operation
Prompter output	VS or VBS (*2) Genlock Input in standalone operation
Genlock input	Black-burst or tri-level sync (*3) Prompter Output in CCU system operation
Intercom	2x 5-pin XLR (Female) Input rating: -60dBm, Output rating: 0dBu ENG/PD channel selection SW, MIC on/off SW, Intercom level control
Program audio	2-channels, PGM audio lebel controls w/Chnl1 & Chnl2 intercom
Microphones	Chnl1 & 2 Line or Mic level select (MENU) with phantom power on/off Mic Input rating: -60dBm
Return / AUX switcher	2-channel, 4-input remote AUX/VF video select
Teleprompter power output	1x 5-pin, 230VAC/60W to 100W, external prompter Tally drive out
Other I/O	SCRIPT: 1x 5-pin Multi for script lamp +12VDC (1.0A max) RET CONT: 1x 6pin Multi for VF AUX return (for use in cranes or extened Head/VF configration) DC IN: 1x 4-pin XLR for 12VDC power input (10.5VDC to 17.0VDC in standalone operation) TRUNK: 1x 8pin Multi, RS-422/150k baud (RS-232C optional)
Dimensions	133(W) x 191(H) x 195(D) mm
Mass	2.5kg (5.5lbs)
Temperature range	Operation -10 °C to +45 °C , 14 °F to +113 °F Storage -20 °C to +60 °C , -4 °F to +140 °F

9-inch Viewfinder VF-L90HD

TV system	59.94/50Hz, 1080i/720p auto-switching
Construction	Metal Die-cast chassis & mount 9-inch, color TFT-LCD, 1280 (H) x 768 (V)
Number of pixels	1280 (H) x 768 (V) normal scan (16:9)
Color temperature	6500K
Input signals	Analog Y/Pb/Pr/SYNC
Functions	BRIGHT, CONTRAST, PEAKING knob VR Power on/off, Tally on/off, Marker on/off
Internal tally	Red/Green
Front tally controls	Tally OFF, NORMAL, HIGH
Dimensions	230(W) x 185(H) x 86(D)
Mass	1.6kg, 3.5lbs
Attachement (Option)	AT-951(mass : 1.6kg, 3.5lbs AT-90 (mass : 0.7kg, 1.54lbs)

7.4-inch Viewfinder HDF-EL800H

TV system	59.94/50Hz, 1080p/1080i/720p auto-switching
Construction	7.4-inch Color OLED
Number of pixels	960 (H) x 540 (V), 16:9
Input signals VF video	Analog component Ys:1.0Vp-p, Pb/Pr: 0.7Vp-p (75Ω)
VF power	+12VDC (10.5 to 17VDC)
VF Tally	R/G Tally
SDI	1x BNC 3G/HD/SD
HDMI	1x HDMI
Functions	BRIGHT, CONTRAST, PEAKING knob VR (front facing) ZEBRA, MARKER, UTIL (Waveform/Vector/Audio indicator)
Internal tally	Red/Green
Front tally controls	Tally OFF, NORMAL, HIGH
Dimensions	215 x 158 x 51.5mm (main body)
Mass	1.25kg, 2.8lb
Attachement (Option)	AT-951(mass : 1.6kg, 3.5lbs AT-90 (mass : 0.7kg, 1.54lbs)

Camera Control Unit CU-UHD4000(59.94Hz) / CU-UHD4000E(50Hz)

Output signals	
4K OUTPUT 1/2	4x BNC 3G-SDI x1 sets. 12G SDI Single Link X2 sets (Option) Square Division or 2 Sample Interleave division 2 channels embedded audio available 3G-SDI: SMPTE 424/425 Level-A/B
HD/SD 1/2	4x BNC 3G-SDI or HD-SDI or SD-SDI ·Down-converted (1080p/1080i/720p/SD) ·HD Cut-out (1080p/1080i) ·2 channels embedded audio available ·3G-SDI: SMPTE424/425 Level-A ·HD-SDI: SMPTE292M ·SD-SDI: SMPTE259M-C
HD/SD 3 (WFM/PIX)	2x BNC 3G-SDI or HD-SDI or SD-SDI ·Down-converted (1080p/1080i/720p/SD) ·2 channels embedded audio available ·3G-SDI: SMPTE424/425 Level-A ·HD-SDI: SMPTE292M ·SD-SDI: SMPTE259M-C
MIC OUT 1/2	0dBm/600Ω
Input signals	
DIGITAL RET IN A	4x BNC 3G-SDI or HD-SDI (1080p/1080i/720p) ·3G-SDI: SMPTE424/425 Level-A ·HD-SDI: SMPTE292M
DIGITAL RET IN B	2x BNC 3G-SDI or HD-SDI (1080p/1080i/720p) ·3G-SDI: SMPTE424/425 Level-A ·HD-SDI: SMPTE292M
GENLOCK IN	2x BNC (Loop through) Black burst signal: 0.45Vp-p/75Ω HDTV Tri-level sync: 0.60Vp-p/75Ω
PROMPT IN	1X BNC VS or VBS 1.0Vp-p/75Ω(Loop through)

INTERCOM (Headset)	1x 5-pin XLR, 0dBu MAX+15dB
REMOTE 1/2	2x 4-pin Multi, 1.5Vp-p
REMOTE 3	LAN
COMMUNICATION	1x 25-pin D-sub (Male)
Intercom (PD/ENG)	0dBm/600Ω(4Wire) 0dBu or -15dBu/200Ω(2Wire) Clear-Com, RTS complied
PGM	0dBm/600Ω
TALLY in (R/G)	Contact/Voltage supply selectable
TALLY OUT (R/G)	Contact supply or Voltage supply (DC24V, 10mA)
WFM CONTROL	1x 15-pin D-sub (Female), WFM 0-7 0/5V
MIC REMOTE	1x 15-pin D-sub (Female), MIC1/2 Gain control
TRUNK	1x 9-pin D-sub (Male), RS-422 / 150k baud (RS-232C optional)
Power supply voltage	(J) AC100V 50Hz/60Hz (CU-UHD4000J) (U) AC117V 60Hz (CU-UHD4000U) (E) AC230V 50Hz (CU-UHD4000E)
Power consumption	Approx. 300W (in AC power operation) Combined with SK-UHD4000, VF-402-S3, CA-UHF4000, and AUX POWER OUT (100VA))
Temperature range	Operating: 0°C ~ +40°C, 32 °F to +113 °F Storage: -20°C ~ +60°C, -4 °F to +140 °F
Mass	10kg (22lbs)
Maximum fiber cable length	1,000 m (with utility power) 4,000m (without utility power)

DIMENSIONS (SK-UHD4000 / CA-UHF4000)

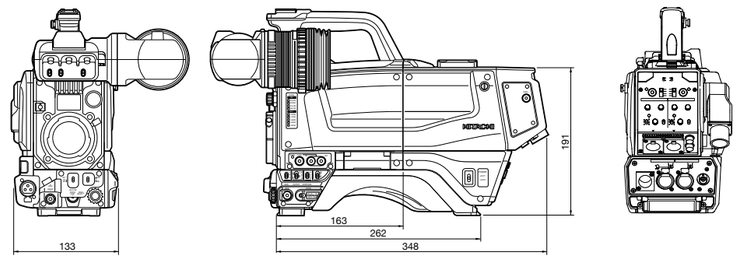
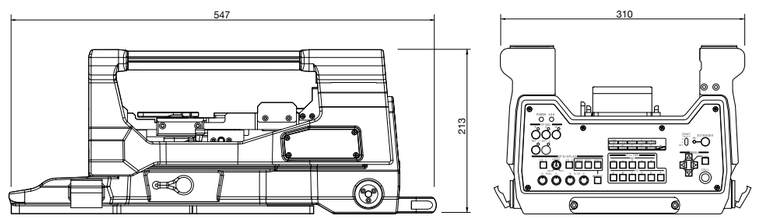
DIMENSIONS (SA-1000)